citrix

Wharton Tech Conference 2026

Blueprints that actually get built : How change really happens in the enterprise

Brian Madden

VP, Technology Officer & Futurist, Citrix

06 February 2026

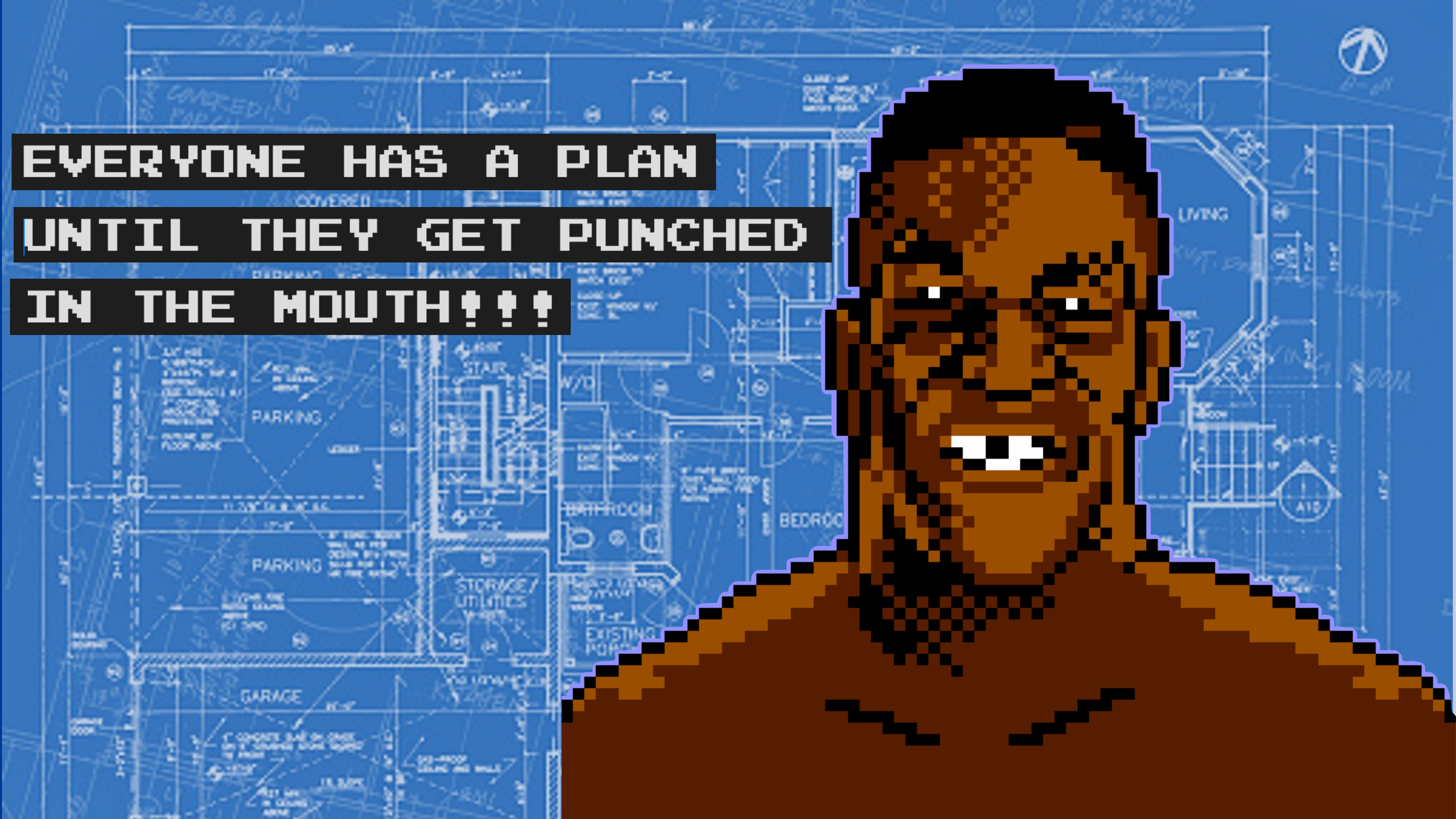
EVERYONE HAS A PLAN
UNTIL THEY GET PUNCHED
IN THE MOUTH!!!
COVERED
PARKING
STAIR
W/D
BATHROOM
BEDROO
LIVING
PARKING
STORAGE/
UTILITIES
EXISTING
GARAGE

In the enterprise, who does the punching?

The bottleneck!

Every technology wave / transformation has one.

It’s never where you expect.

It determines whether blueprints become reality, or stay blueprints.

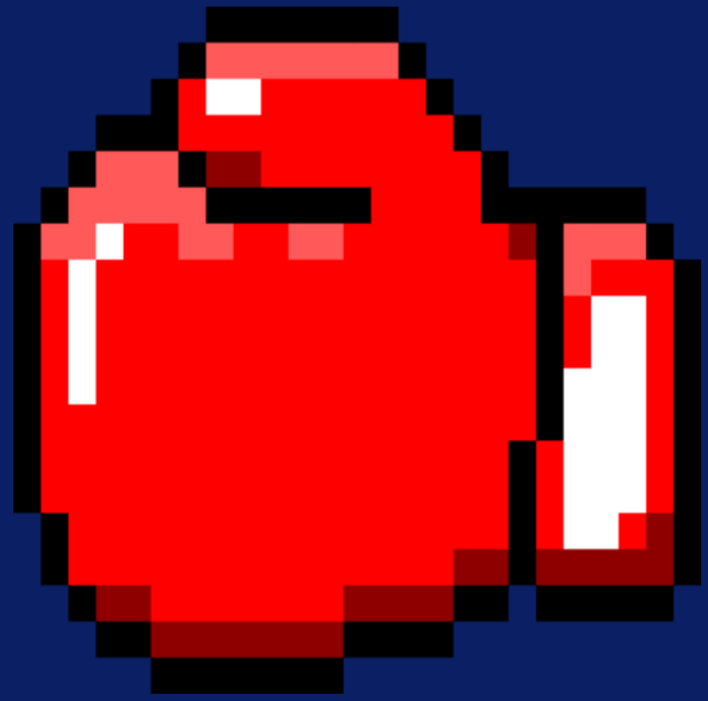

citrix

Where’s the bottleneck?

That’s where the value concentrates.

That’s where leverage lives.

That’s where careers are made.

citrix

Let’s go back 150 years…

The factory

citrix

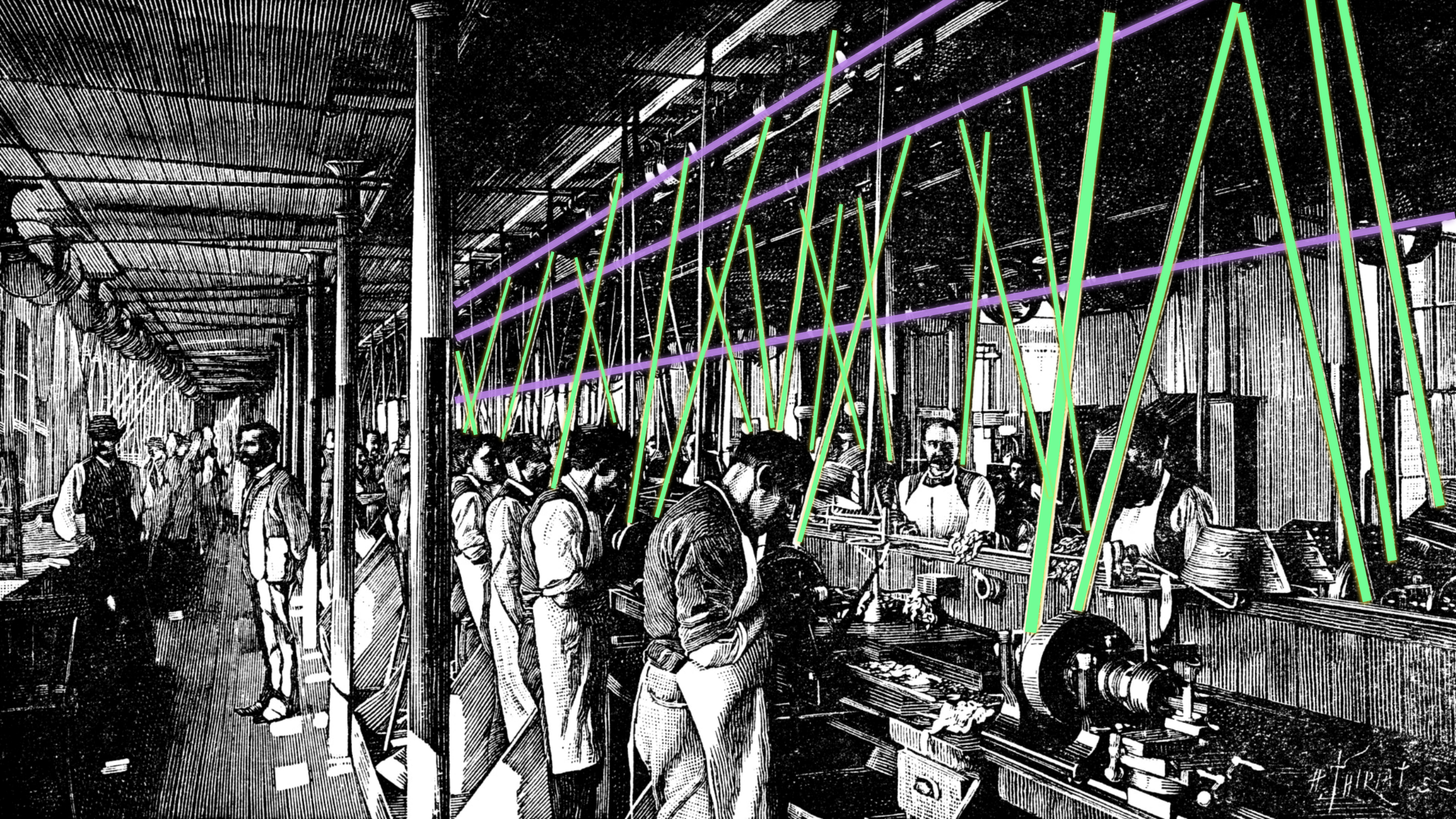

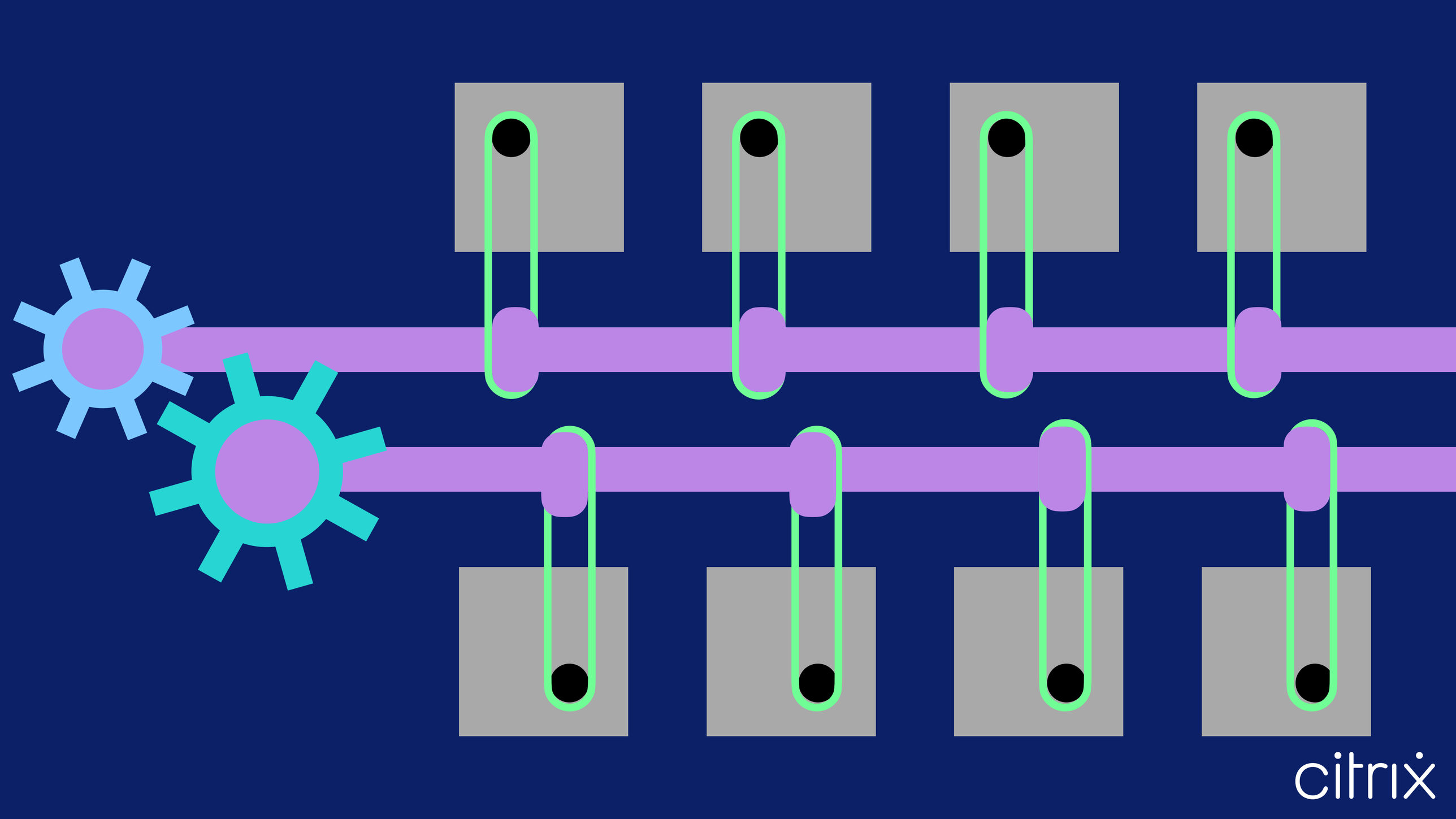
citrix

Generated by AI

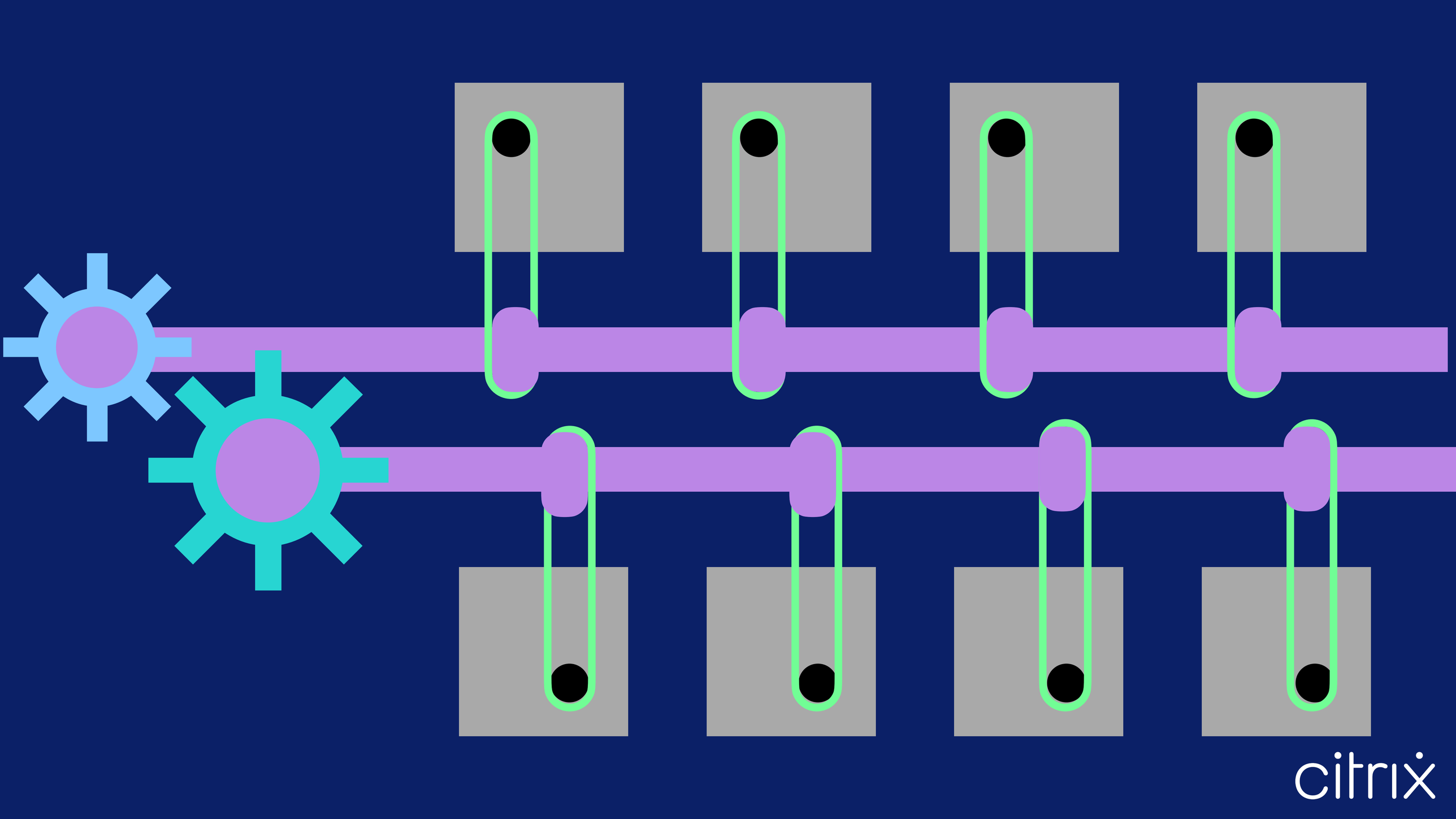
citrix

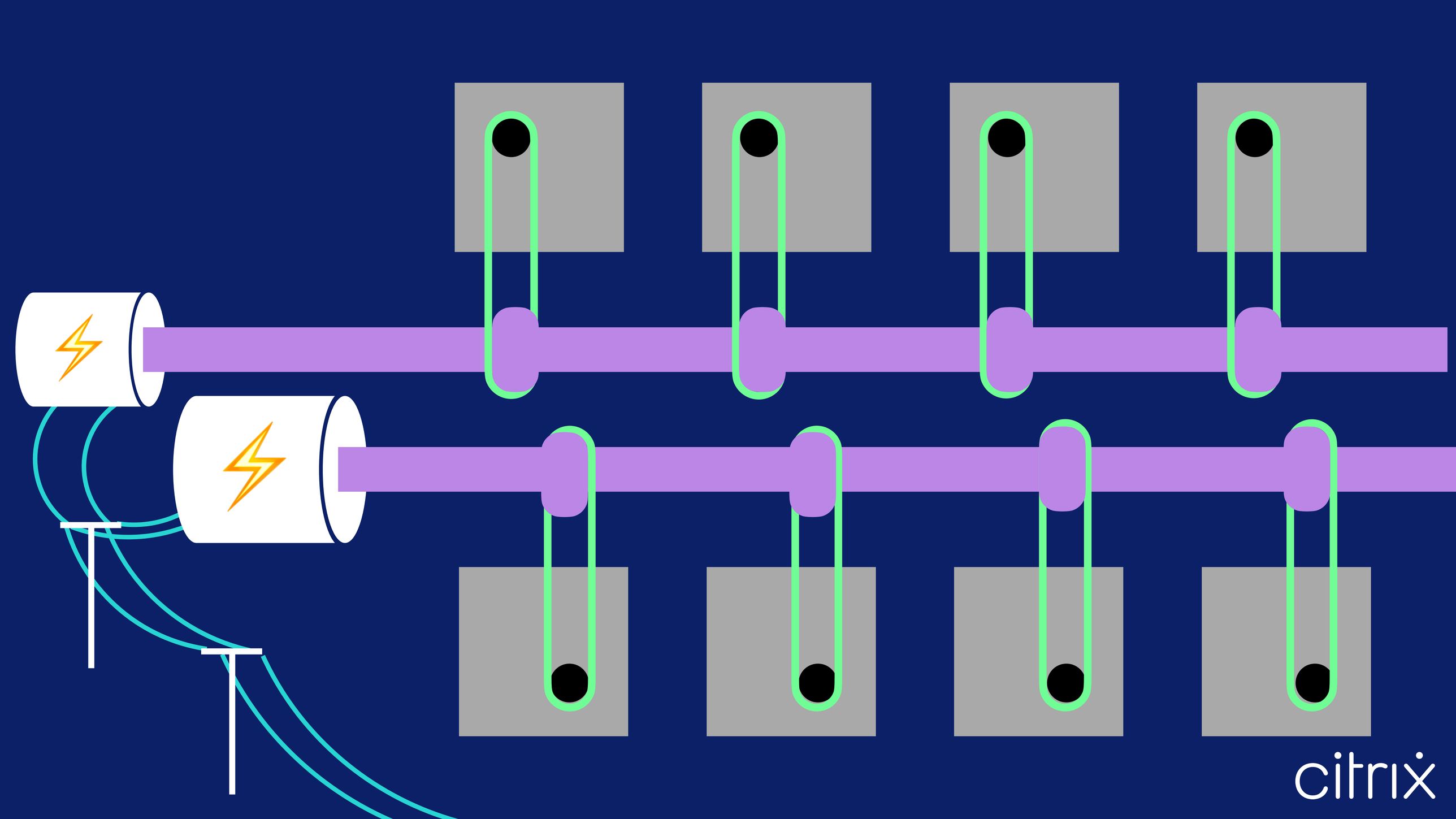
citrix

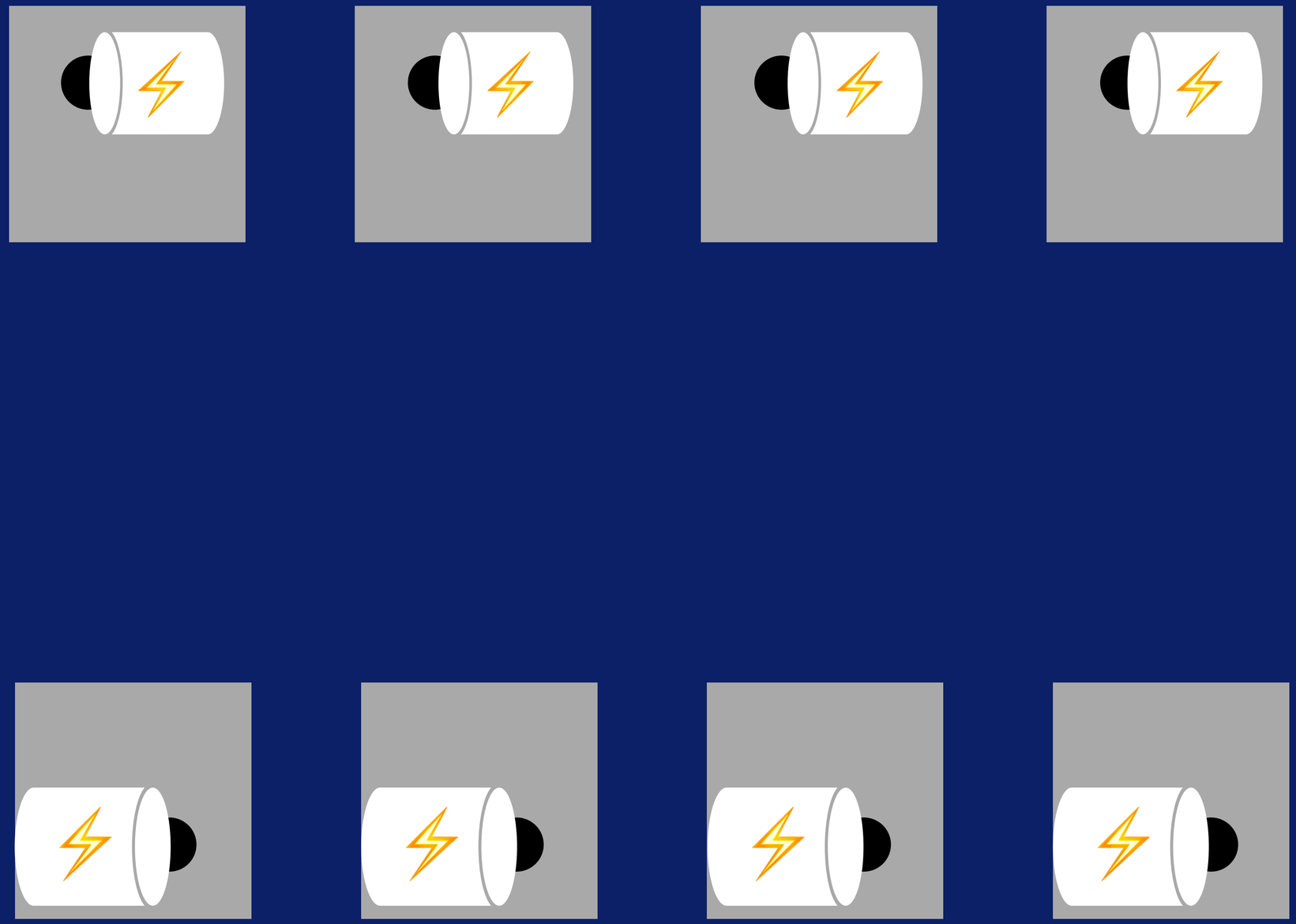

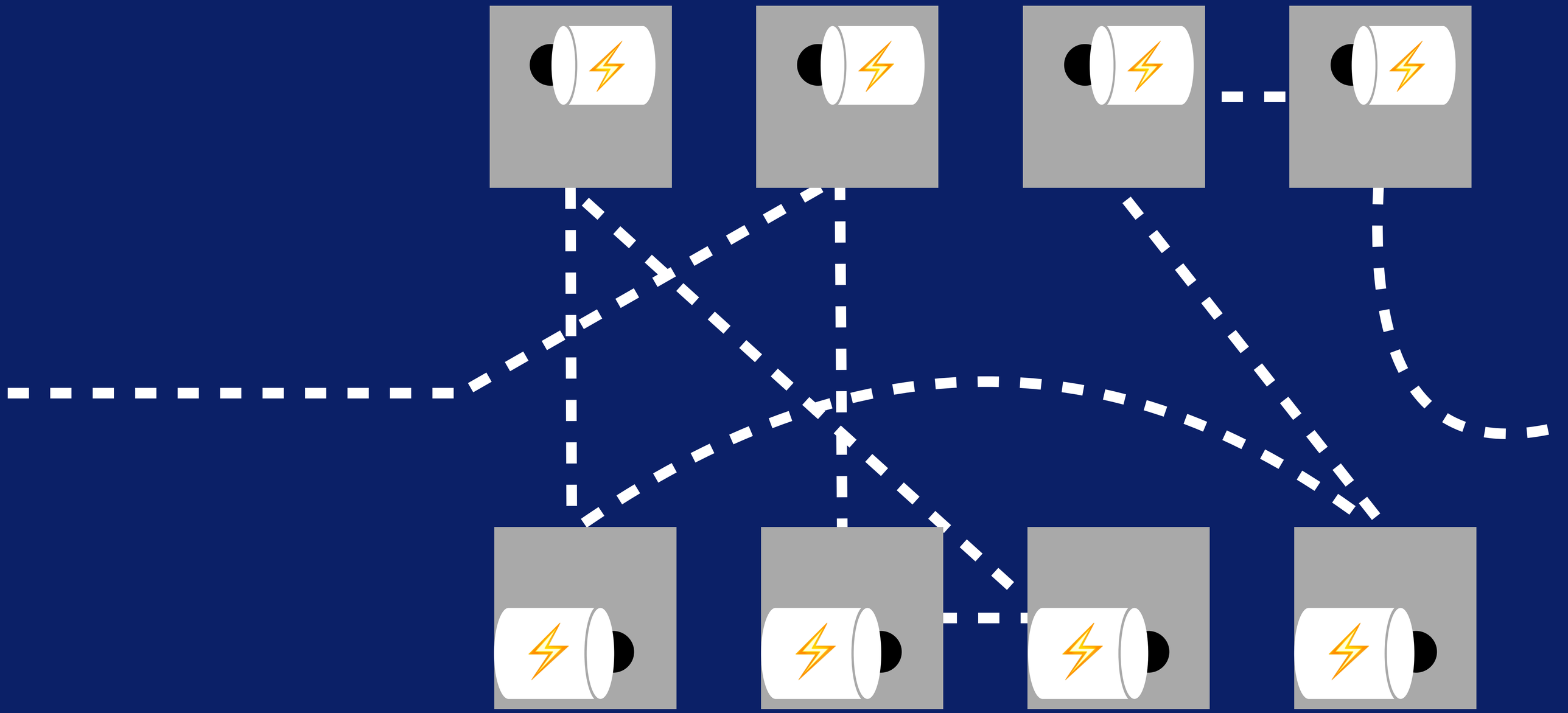
citrix

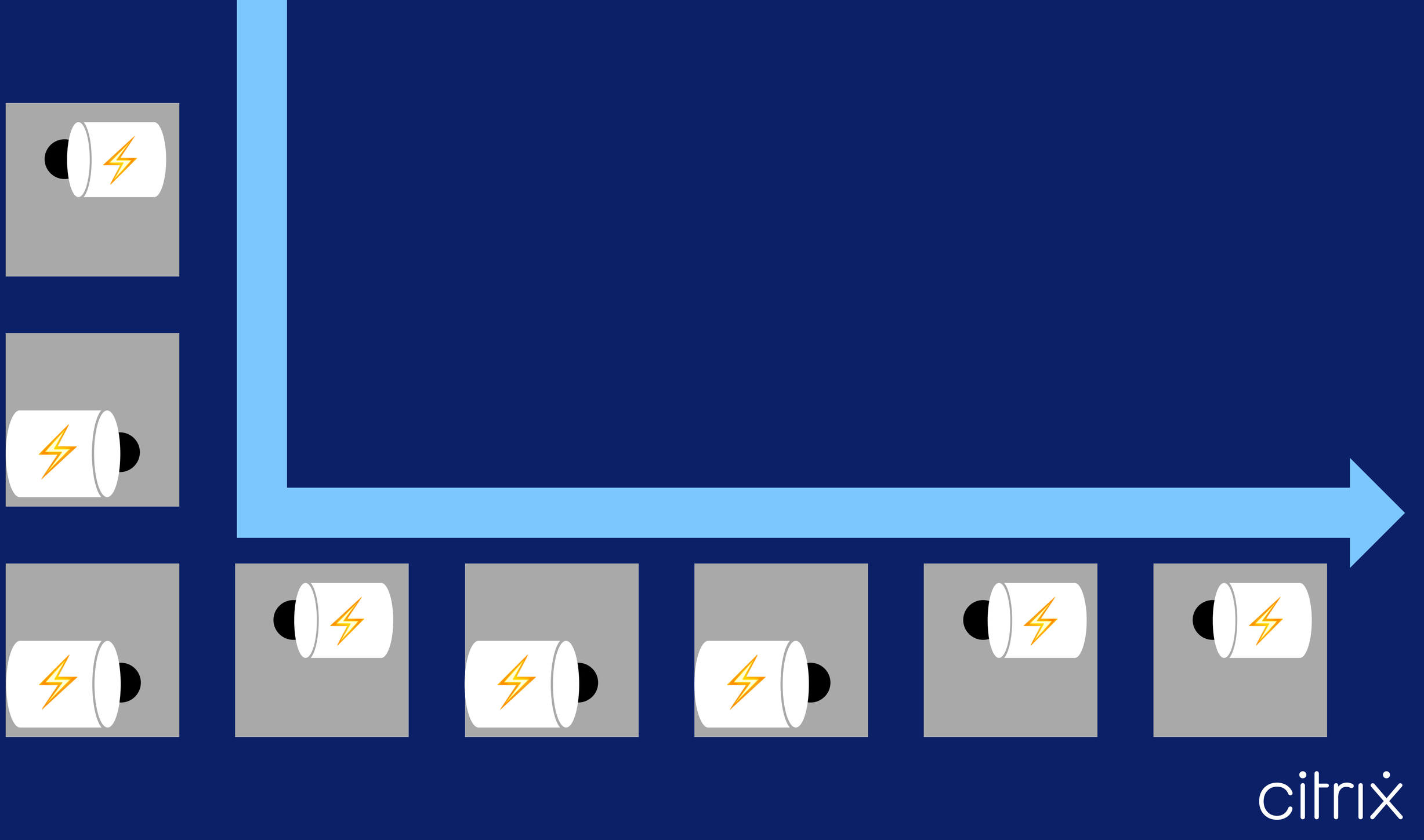
citrix

Takeaways

New tech plugged into old structures changes nothing.

The transformation only happens when you redesign around the existing bottlenecks the new tech enables.

BTW factory electrification took 50 years! They kept plugging new tech into the old structures.

The bottleneck wasn’t the motors.

It was the workflow design.

citrix

Fast forward 100 years to…

The 30 year web migration

citrix

1990s

Windows apps are stuck in the office :(

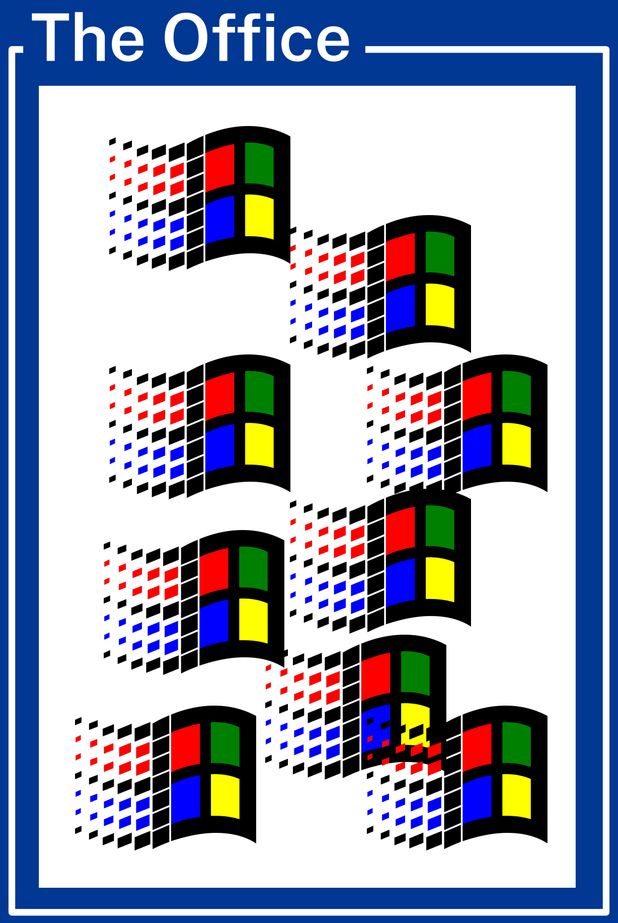

1990s: “The web will kill Windows apps!”

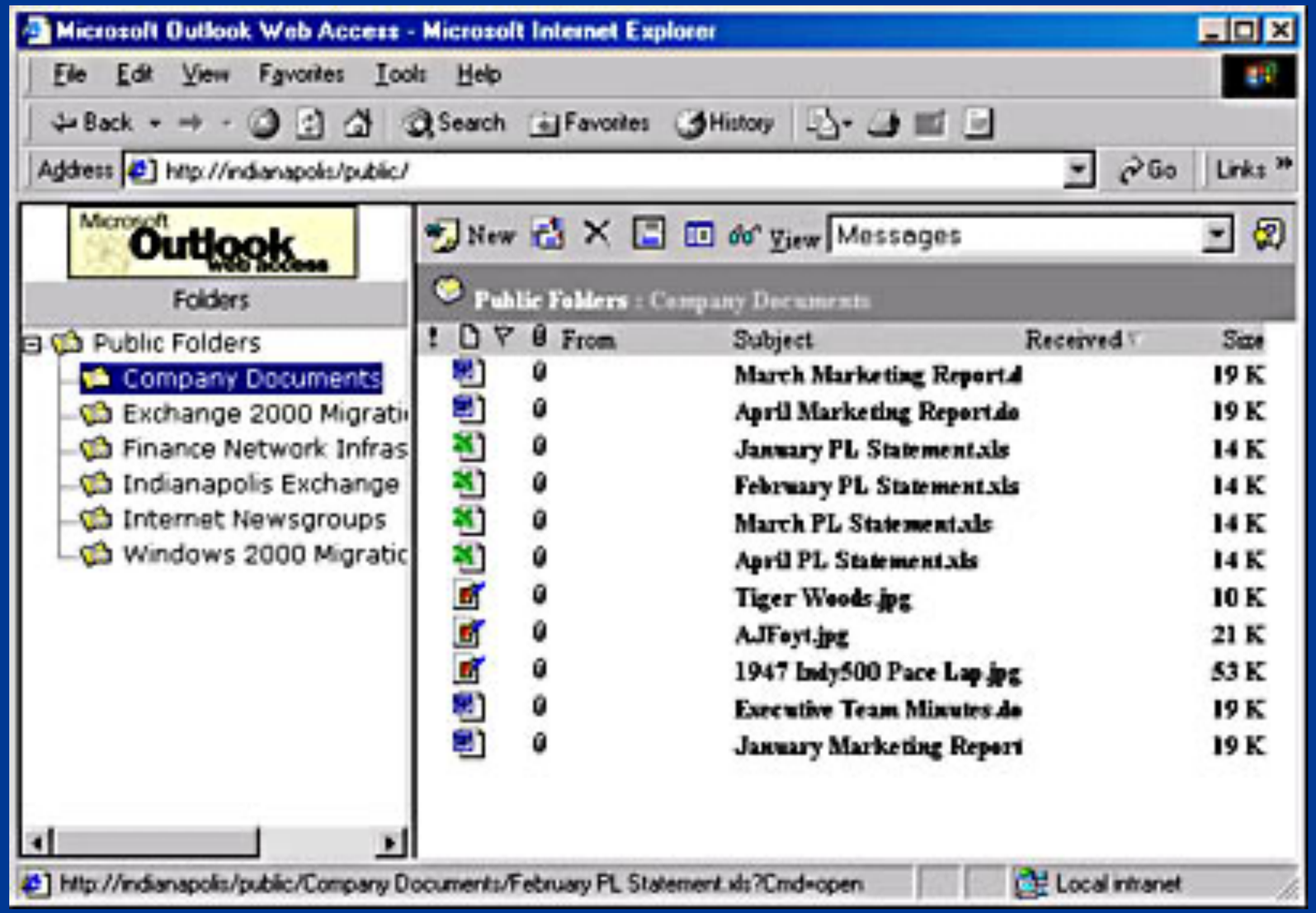

1990s : Why the web is the future

Access apps instantly without having to install them first

Access apps from any device, even Mac or Linux!

Access apps from anywhere, not just the office!

Update apps one time (on the server), not for every desktop!

Good app performance even on slow connections!

Better security, no data is stored on the client device!

How to get this? C’est simple :

Just **REWRITE ALL YOUR APPS FROM SCRATCH !!!**

web is going to kill the old way !

citrix

This is the factory story again!

They had the technology. The bottleneck was redesigning everything around it.

They plugged web technology into a world built around Windows desktops and expected transformation.

Of course it didn’t work.

citrix

1990s : Why the web is the future

Access apps instantly without ha

Access apps from any device, e

Access apps from anywhere, no

Update apps one time (on the s op!

Good app performance even o

Better security, no data is store

How to get this? C’est simple :

citrix

Jump to the 2000s

The workers take power

citrix

BlackBerry
12:21
WED, MAY 25
EDGE
(3) Messages
SPACE
SYM

Company response

NO!

Worker response

Where’s the bottleneck?

Companies still have compliance, regulations, reliability training, security, audit, support…
All the boring governance stuff 😒

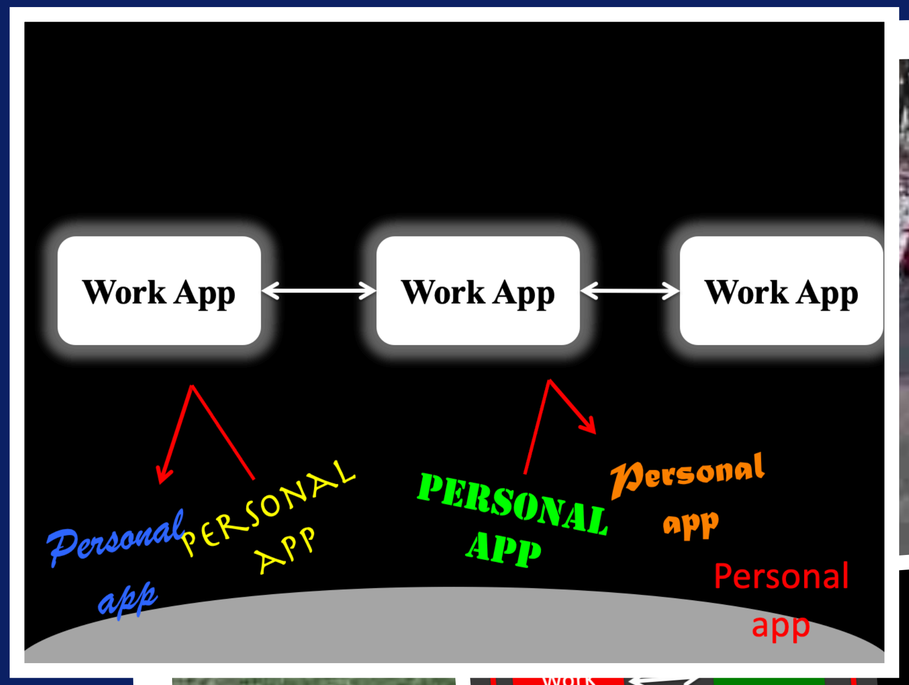

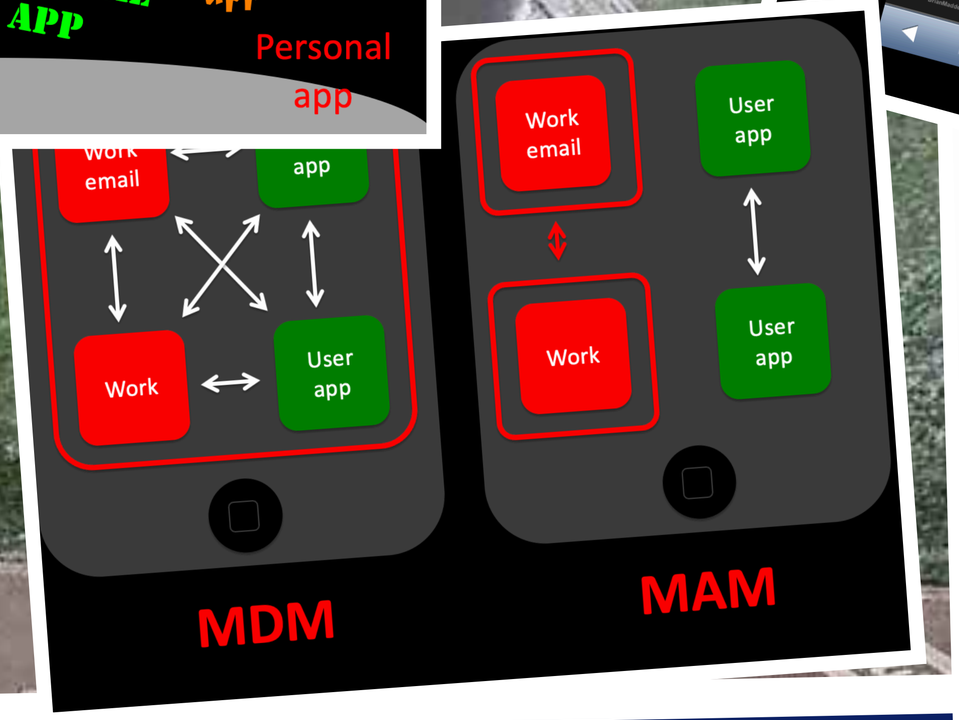

Work

Personal

Where’s the bottleneck?

Companies still have compliance, regulations, reliability training, security, audit, support…
All the boring governance stuff 😒

Eventually they (we?) figured it out

But we had to make this new stuff fit into the existing world

We “wrapped” the governance around the devices & apps

It’s the same story as the factory: real bottleneck, not tech

citrix

Jump to today

AI (is changing everything)

Where’s the bottleneck?

citrix

AI removes all the bottlenecks, right?

Unlike web apps, workers don't need IT to rewrite anything. You just “use it.”

Unlike early consumerization of IT, the tools are instantly productive. $20/month ChatGPT = immediate value.

It’s consumerization on steroids. Workers can just start. No permission needed.

Everyone’s panicking or excited. CEOs have FOMO. Trillions in value is supposed to be unlocked.

citrix

But we're also reading that AI projects are failing within companies

The tech works & is useful. That's not the bottleneck.

Companies need governance. That's hard, but has been solved before.

So what's happening here?

Let's apply our framework and look for the bottleneck.

citrix

AI shifts the change from apps to knowledge

“Things you can see” to “Things you *can’t* see.”

Motors, devices, apps: visible, discrete, replaceable.

AI is knowledge: invisible, fluid, personal.

Knowledge lives in people’s heads.

citrix

Organizations are massive knowledge machines

But only the outputs are visible!

The “real” work is invisible: reasoning, judgment, tacit knowledge, how people actually get things done.

citrix

Most knowledge work is invisible

emails
documents
meeting transcripts
chats

thinking
reasoning
staring out the window
looking at birds

citrix

Most knowledge work is invisible

Consultants and IT can only see the 20%. They build AI solutions for the visible part.

Workers have access to their full 100%. They (you) can wire AI into workflows no one else can see.

That’s why workers with $20/month ChatGPT are getting better results than million-dollar enterprise AI projects.

It's not because of tech. It’s access to the invisible 80%.

citrix

The bottleneck is organizational context that lives in workers’ heads.

We know how to think about this now. We've seen this pattern before.

The technology is ready. We're past the inflection point. This isn’t “AI helps you write emails” anymore.

citrix

Stop using AI to solve the 20% problem

AI as a tool is important, but not the interesting part.
(And not the real bottleneck.)

“Write this email, summarize this doc, automate this workflow” is the the 20%. The visible stuff. The easy stuff.

That’s what most enterprise AI projects focus on.
(And that’s why they fail to live up to expectations)

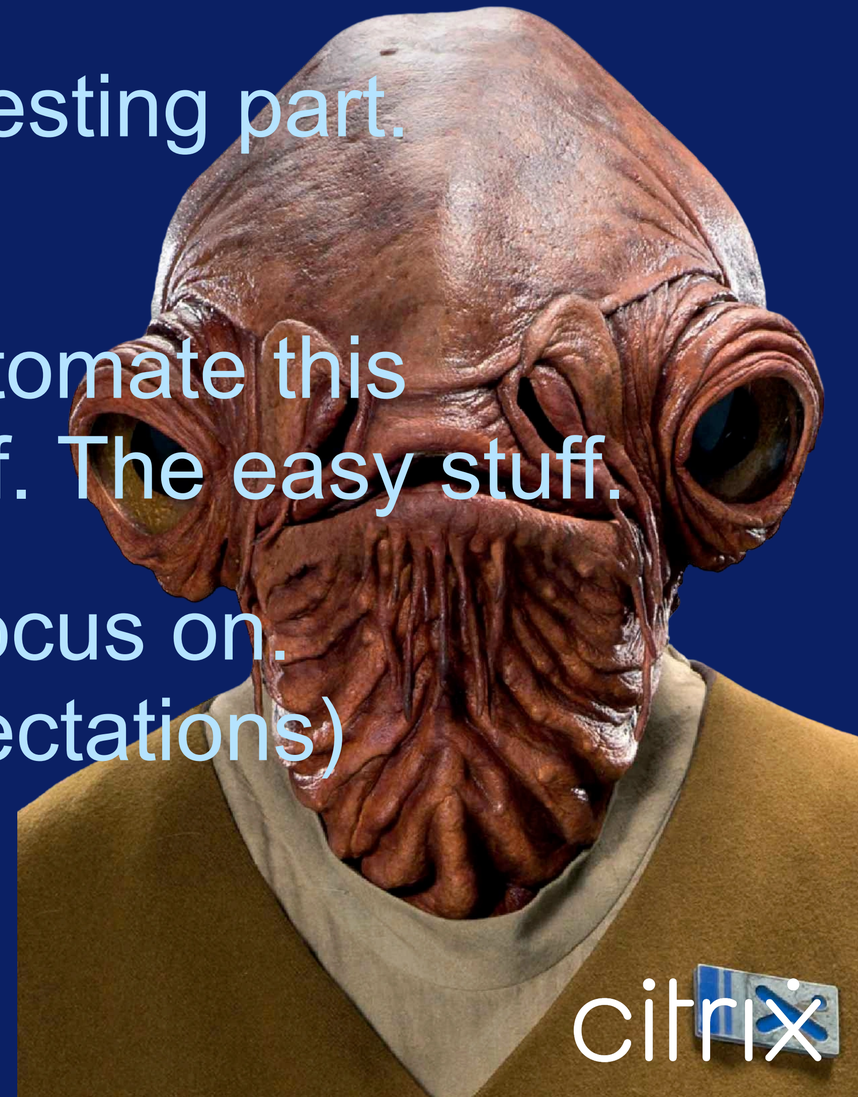

The shift: use AI to solve the 80% problem

I stopped using AI like a tool. I started using it to unlock my thinking.

I built a personal knowledge system—
everything I know, everything I've written, & how I think.

Now I can query my own knowledge. I ask it questions about my work. It's a true knowledge partner.

That's the 80%. My reasoning, judgment, & context.
The invisible part.

citrix

This is the real bottleneck (which you can solve it for yourself)

Companies will figure this out eventually.
(Some of you might help them. That’s a career!)

But you can start today. Build your own knowledge system / second brain.

Just ask your AI: “I want to build a personal knowledge system. Take everything you know about me. Let's go.”

Claude, ChatGPT, Gemini… Start with 30k words of your own thinking and it compounds from there.

citrix

Always remember the factory

They had electricity and motors for 50 years before they found the bottleneck.

Once they did, they rearranged the machines.

That's what you're going to do, but with knowledge instead of machines.

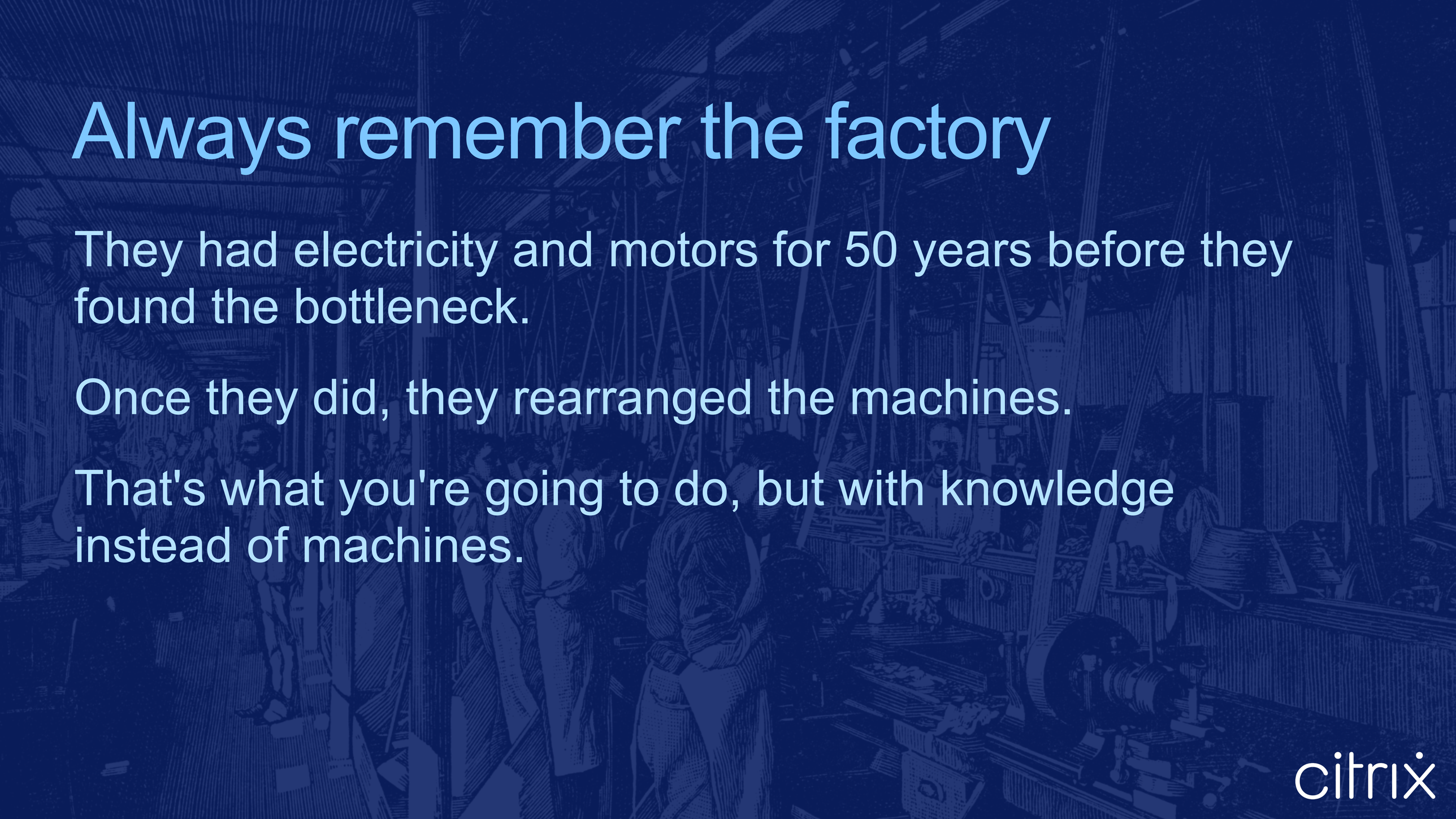

Keep thinking about the bottleneck

When everything is changing too fast…

When it seems crazy…

Ask yourself, “Where’s the bottleneck?”

Position yourself there.

citrix

Brian Madden

LinkedIn
bmadden

Blog
citrix.com/blogs

Updates
bmad.com

Resources
bmad.com/links

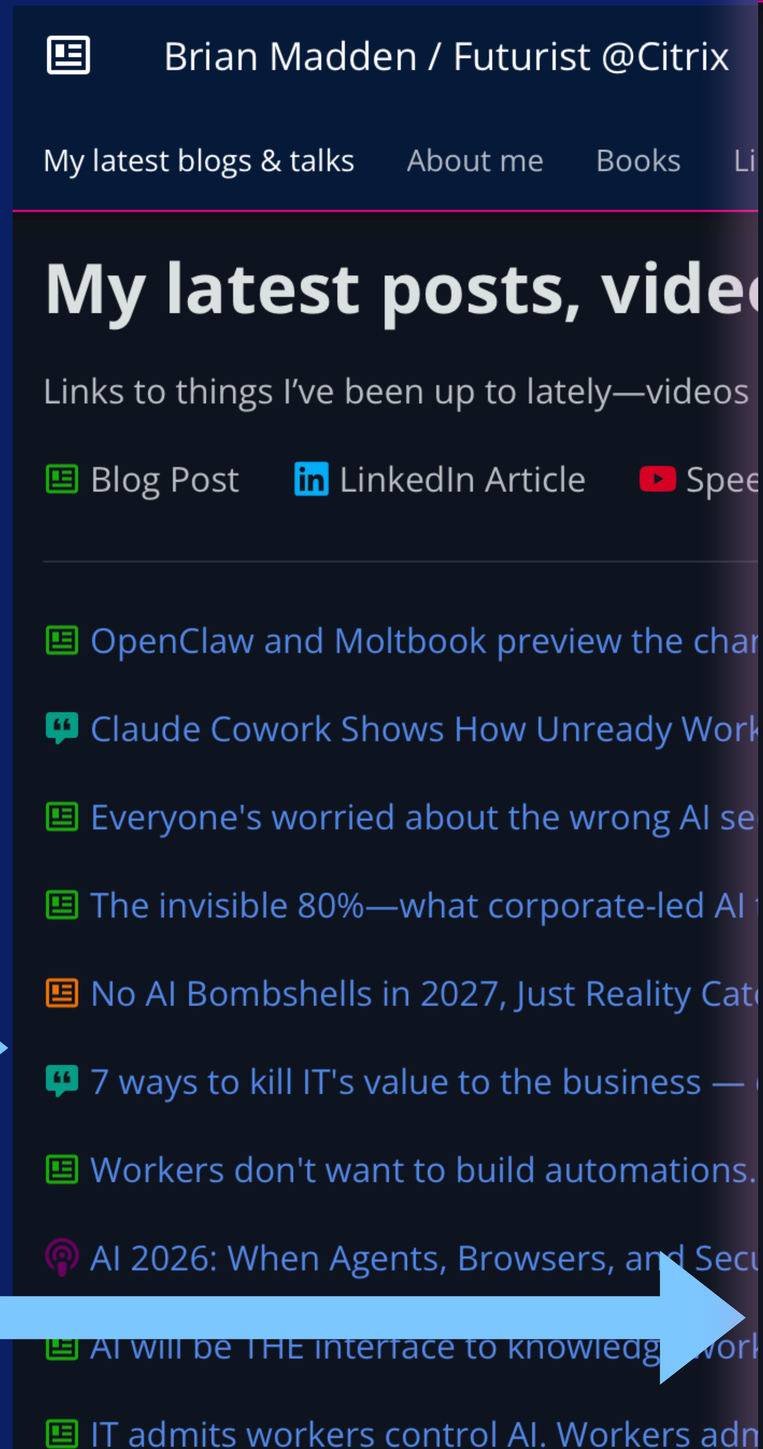

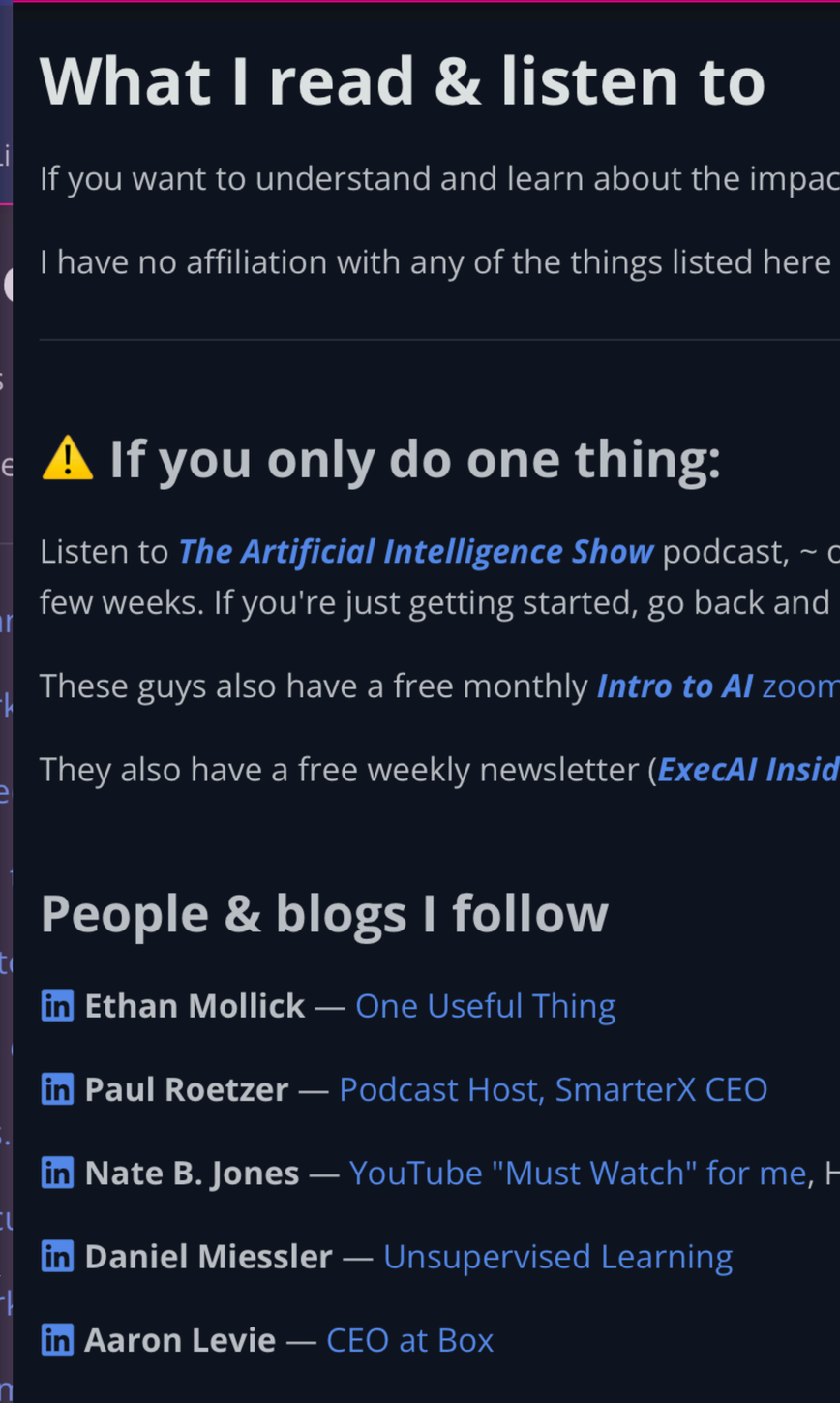

© Copyright 2026 Citrix, Inc.